STRECHA–ROOF

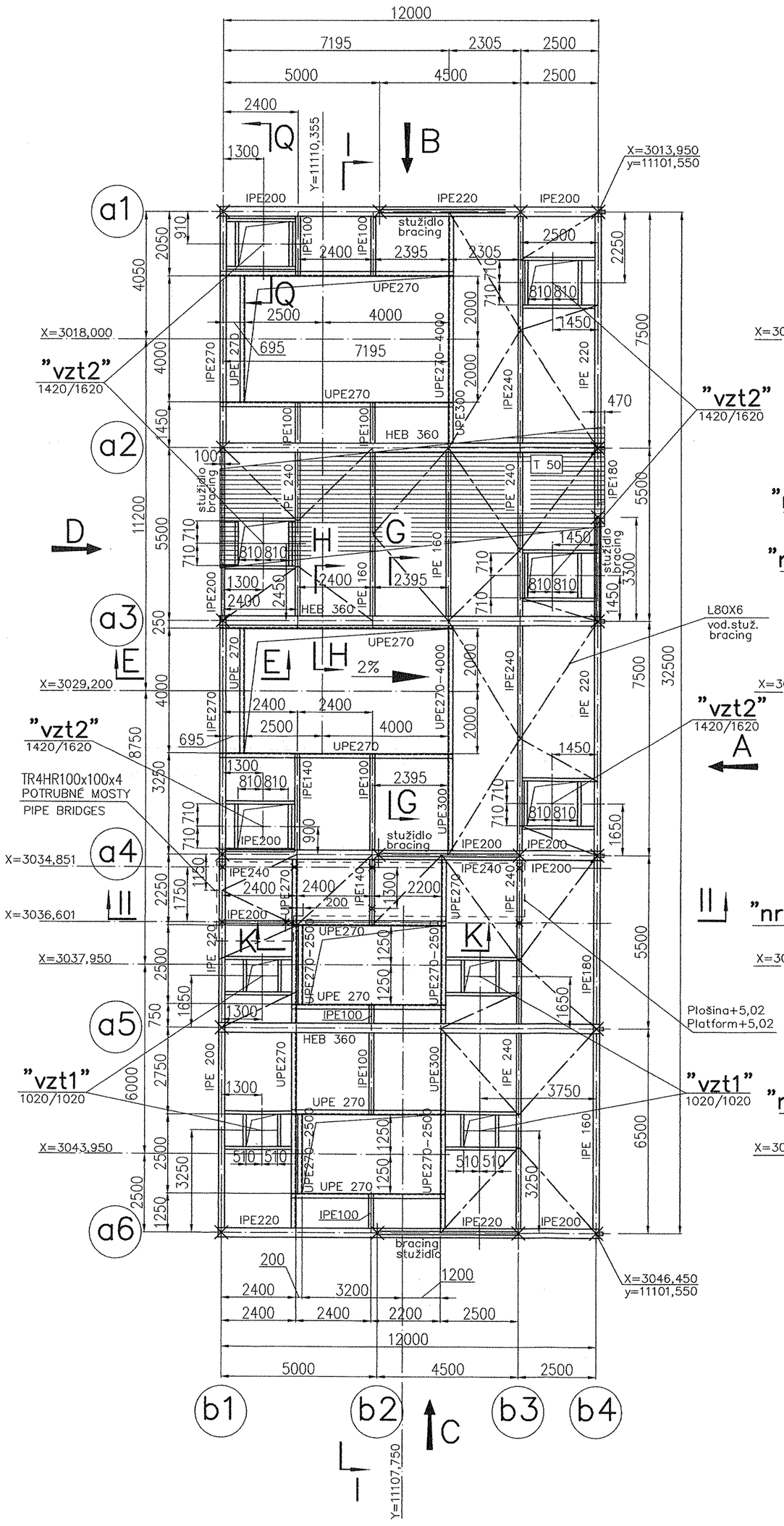

ODOBERATELNÉ KRYTY
REMOVABLE COVERS

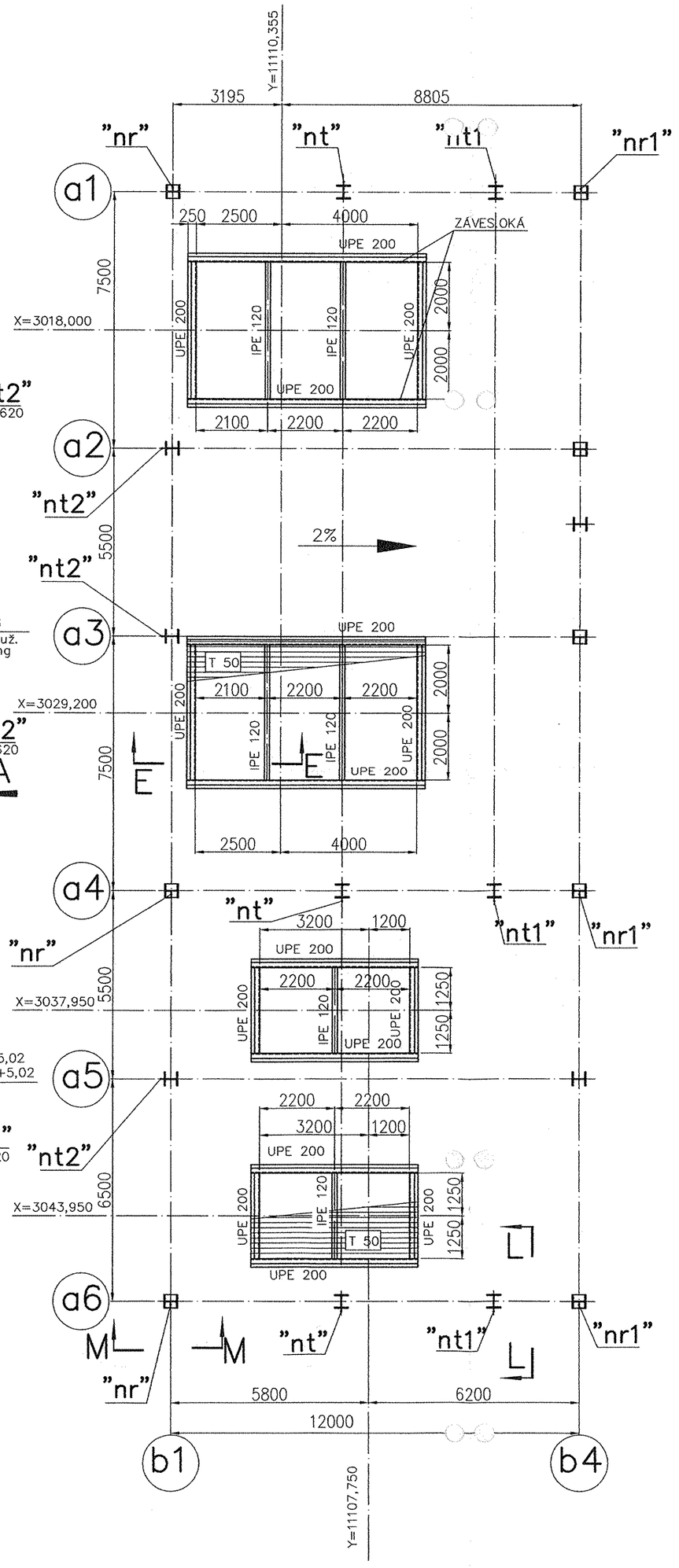

Section G–G

M1:20

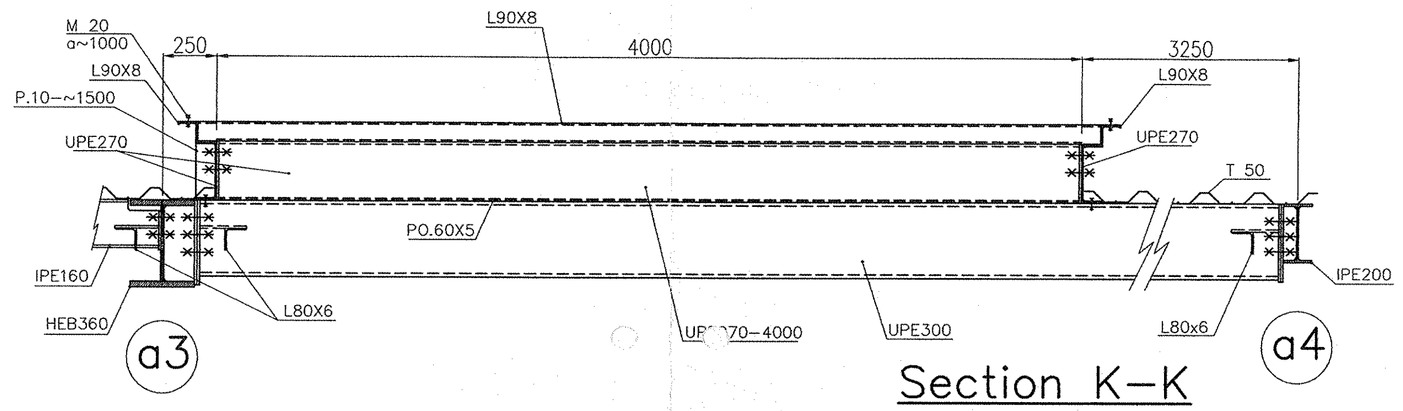

Section H–H

M1:20

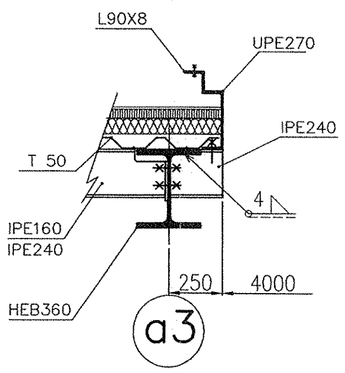

Section K–K

M1:20

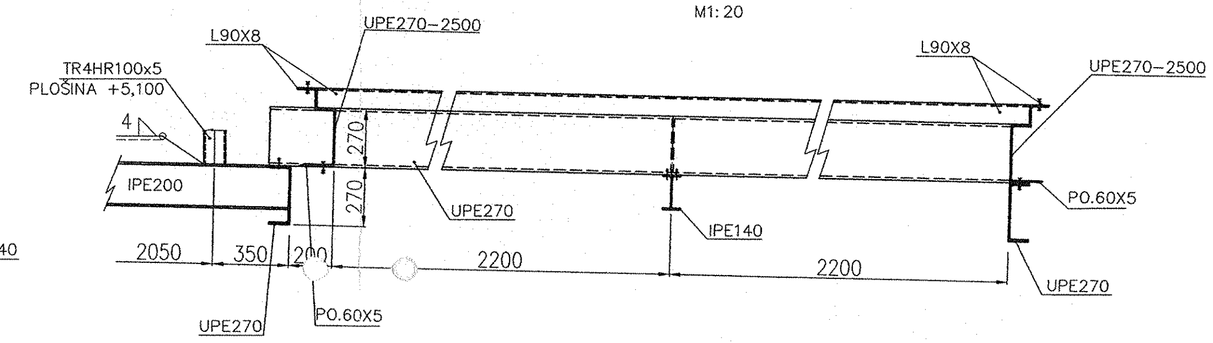

Section E–E

M1:20

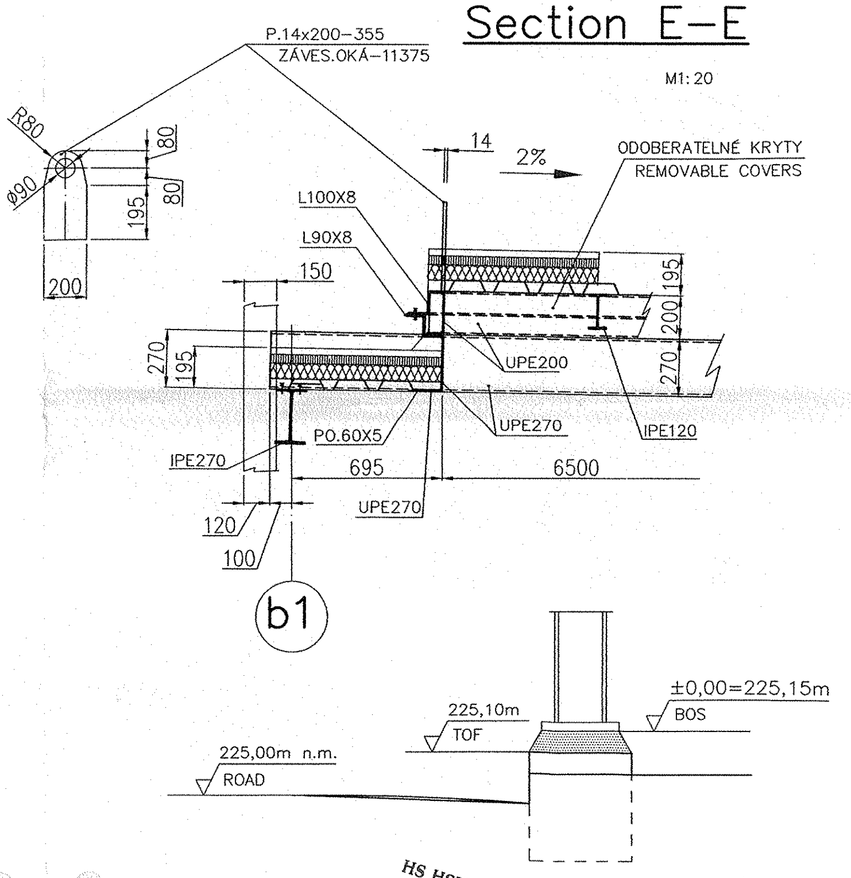

Section L–L

M1:20

NÁSTAVCE nt1 (nt) /nt2/ / Legs nt1 (nt) /nt2/

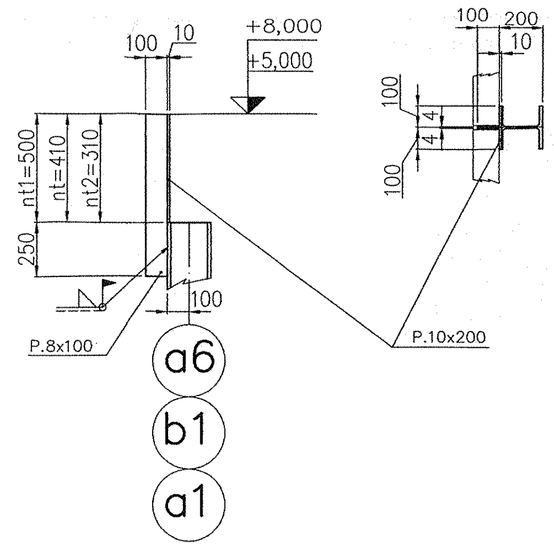

Section M– M

M1:20

NÁSTAVCE nr (nr1) / Legs nr (nr1)

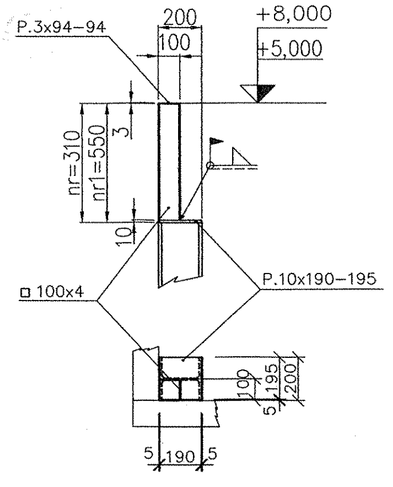

HS HSV s.r.o. KOŠICE
Technický úsek

LEVELS

TOP OF INTERNAL ROADS: 225,00m

TOP OF FOUNDATION: 225,10m

BOTTOM OF STEEL STRUCTURE OR EQUIPMENT: 225,15m = ±0,00

PROJ... VYHOTOVENIA

FREIGABE
FOR CONSTRUCTION
Ra 26. 07. 05

PLANT NORTH

35°

4

±0,000=225,15 m n. m. Jadran

PROJEKT PRE REALIZÁCIU STAVBY POD z. č. 3821.2.002.OK–01

REV	DATE	NAME	CHECKED	HISTORY FILE
B				
A	25.07.2005	ING.ĎURAŠKOVÁ	ING.PAVLIČKO	REAL.PROJ./CONSTRUCTION DESIGN
0	14.02.2005	ING.ĎURAŠKOVÁ	ING.PAVLIČKO	TENDR.DOK./TENDER DOCUMENTATION

HPK engineering a.s.

AIR LIQUIDE

JOB CODE: K70101

REFERENCE: ASU No.9 KOŠICE

SCALE 1:100

ORIGINAL FORMAT A1

SHEET: 001 OF 002 SHEETS

REPLACES: 79_.____

REPLACED BY: 79_.-----

TITLE: UNIT 1 –COMPRESSOR BUILDING
SO 002 KOMPRESOROVÁ STANICA
SO 002 COMPRESSOR BUILDING
STRECHA / ROOF

DRAWING NO.: 792.87449

REV. A

This drawing is protected by copyright. It may not be copied or used without our written authorization and it is strictly prohibited to disclose it to any third parties.